Clarke®

STRONG-ARM



HYDRAULIC CAR LIFT

MODEL NO: CCL2250

PART NO: 7610146

OPERATION & MAINTENANCE INSTRUCTIONS

UK CA CE

ORIGINAL INSTRUCTIONS

DL0726 - Rev 4

INTRODUCTION

Thank you for purchasing this CLARKE Car Lift. Before attempting to operate this product, it is essential that you read this manual thoroughly and carefully follow all instructions given. In doing so you can look forward to the product giving you long and satisfactory service.

SPECIFICATIONS

Model Number	CCL2250
Rated voltage	230V - 50Hz
Current	5.5A
Ingress protection rating	IP55
Maximum Safe Load	2268 kg
Minimum Table Height	75 mm
Maximum Frame Height	434 mm
Maximum Lifting Height	440/470mm
Net lifter weight	36.5 kg
Net pump unit weight (excluding hoses)	19.6 kg
Table dimensions	1770 x 280 x 80mm
Lifting block centres	900 - 1410 mm
Operating temperature range	-20°C - +50°C
Hydraulic fluid volume	2 L
Hydraulic fluid type (Not Supplied)	ISO-15, ISO-46 or HP 32
Pump max working pressure	23Mpa/3335psi
Hydraulic hose length (each)	3810mm

GUARANTEE

This CLARKE product is guaranteed against faulty manufacture for a period of 12 months from the date of purchase. Please keep your receipt as proof of purchase.

This guarantee is invalid if the product is found to have been abused or tampered with in any way, or not used for the purpose for which it was intended.

Faulty goods should be returned to their place of purchase, no product can be returned to us without prior permission.

This guarantee does not affect your statutory rights.

GENERAL SAFETY RULES



CAUTION: FAILURE TO FOLLOW THESE PRECAUTIONS COULD RESULT IN PERSONAL INJURY, AND/OR DAMAGE TO PROPERTY.

LIFTING OPERATIONS AND LIFTING EQUIPMENT REGULATIONS 1998

This lift may fall within the scope of LOLER. It is the owner's responsibility to determine whether or not it does and, if so, to comply with any applicable requirements in LOLER, for having the lift thoroughly examined.

WORK ENVIRONMENT

1. Keep the work area clean, tidy and well lit. Cluttered and dark areas invite accidents.
2. **DO NOT** operate in explosive atmospheres such as in the presence of flammable liquids, gases or dust. Powered products create sparks which may ignite the dust or fumes.
3. Keep children and bystanders away while operating this equipment. Distractions can cause you to lose control.
4. **NEVER** leave this lift unattended whilst there is a load on it unless it is mechanically locked using the safety bars fitted.
5. **ALWAYS** use the lift on a solid, flat, level surface capable of supporting the weight of the lift and vehicle.

PERSONAL SAFETY

1. **ENSURE** the operator is trained in both operational and safety aspects of using this product.
2. Stay alert, watch what you are doing and use common sense when operating a lift. **DO NOT** use while you are tired or under the influence of drugs, alcohol or medication. A moment of inattention may result in personal injury.
3. **DO NOT** overreach. Keep proper footing and balance at all times.
4. Dress properly. **DO NOT** wear loose clothing or jewellery. Keep your hair, clothing and gloves away from moving parts. Loose clothes, jewellery or long hair can be caught in moving parts.
5. **ALWAYS** use appropriate safety equipment when using this lift.

ELECTRICAL SAFETY

1. Power plugs must match the outlet. **NEVER** modify the plug in any way. **DO NOT** use adapter plugs with earthed (grounded) power products. Correct plugs and matching outlets will reduce the risk of electric shock.
2. **DO NOT** abuse the cable. Keep the cable away from heat, oil, sharp edges or moving parts. Damaged or entangled cables increase the risk of electric shock.
3. **The power pack is protected** to IP55 standards but outdoor use in all weathers is not recommended.
4. If operating outdoors, use an extension cable suitable for outdoor use. Use of a cable suitable for outdoor use reduces the risk of electric shock.

TABLE LIFT-SPECIFIC SAFETY PRECAUTIONS

1. **ALWAYS** inspect the lift before use to ensure it is in good condition and replace any damaged or worn parts.
2. **NEVER** exceed the safe working load and only use the lift for its intended purpose.
3. **NEVER** use the lift if it has been subjected to an abnormal load or shock. It should be removed from service immediately and fully inspected by qualified personnel before being passed as serviceable before being used again.
4. **NEVER** rely on the hydraulic rams to support the lifting tables when loaded.
5. **NEVER** crawl or reach under either lifting table unless mechanically locked using the safety bars fitted.
6. **ALWAYS** use the locking bars to hold the tables in one of the positions provided.
7. **NEVER** raise a load directly on the frames. Always use the rubber lift blocks provided.
8. All hose couplings must be securely connected before using the equipment and never be disconnected during use due to the stored hydraulic pressure in the hoses.
9. Ensure that the vehicle is equally balanced on the lift. If the vehicle to be lifted is not correctly positioned there is a risk of it falling which could cause serious personal injury and/or damage to property.
10. Before lifting, check that the lifting frames are correctly positioned under the vehicle and as parallel as possible, that nobody is partly under the vehicle being lifted, that the lifting frame ‘safety locking bars’ are turned outwards and that there are no obstructions around or above the vehicle.
11. Familiarise yourself with the lift and its controls by raising and lowering it a few times without a load. **DO NOT** raise to the maximum height without a load – only raise it to the lower locking position.
12. **DO NOT** lower the vehicle if wheels or tyres have been removed. There must be space between the ground and the load that is to be lifted, in order to raise the

lifting frames slightly before lifting the load. The lift cannot lift a full load from a fully lowered position.

13. For optimum load stability, always place the two lifting frames as parallel with each other as the vehicle's lifting points permit.
14. **NEVER** attempt to drive the vehicle up onto the lift as this will damage the lifting frames.
15. **ALWAYS** keep clear of pinch points when the components are moving.
16. **NEVER** leave the lift unattended if it is not fully lowered or locked in the lower or upper locking position. Scissor lifts are designed to only hold loads with the locking bars in the safety locking positions.
17. **ALWAYS** use spare parts supplied by CLARKE International. Using non-standard parts could be extremely dangerous.

Please keep these instructions in a safe place for future reference.

ENVIRONMENTAL PROTECTION

DO NOT dispose of this product with general household waste. All tools, accessories and packaging should be sorted, taken to a recycling centre and disposed of according to the laws governing Waste Electrical and Electronic Equipment.

Through the purchase of this product, the customer is taking on the obligation to deal with the WEEE in accordance with the WEEE regulations in relation to the treatment, recycling & recovery and environmentally sound disposal of the WEEE.

In effect, this means that this product must not be disposed of with general household waste. It must be disposed of according to the laws governing Waste Electrical and Electronic Equipment (WEEE) at a recognised disposal facility.

ELECTRICAL CONNECTIONS

WARNING! READ THESE ELECTRICAL SAFETY INSTRUCTIONS THOROUGHLY BEFORE CONNECTING THE MACHINE TO THE MAINS SUPPLY.

Before switching the product on, make sure that the voltage of your electricity supply is the same as that indicated on the rating plate. This product is designed to operate on 230VAC 50Hz. Connecting it to any other power source may cause damage.

This product may be fitted with a non-rewireable plug. If it is necessary to change the fuse in the plug, the fuse cover must be refitted. If the fuse cover becomes lost or damaged, the plug must not be used until a suitable replacement is obtained.

If the plug has to be changed because it is not suitable for your socket, or due to damage, it should be cut off and a replacement fitted, following the wiring instructions shown below. The old plug must be disposed of safely, as insertion into a mains socket could cause an electrical hazard.

If the colours of the wires in the power cable of this product do not correspond with the markings on the terminals of your plug, proceed as follows.

- The **Blue** wire must be connected to the terminal marked **N** or coloured **Black**.
- The **Brown** wire must be connected to the terminal marked **L** or coloured **Red**.
- The **Yellow and Green** wire must be connected to the terminal marked **E** or ⏚ or coloured **Green**.

Plug must be BS1363/A approved.

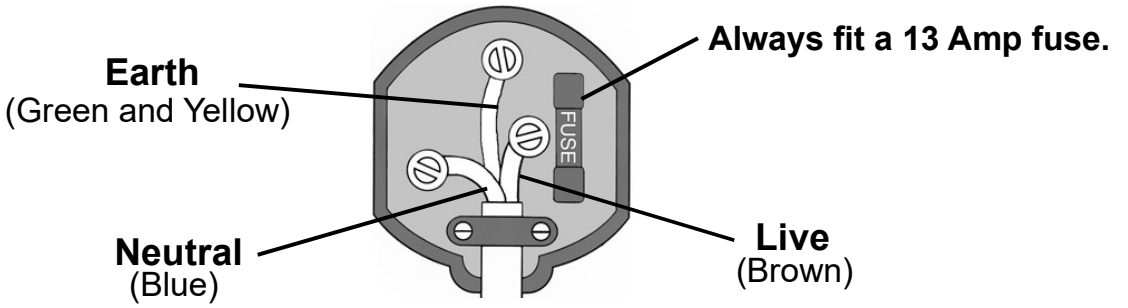

Ensure that the outer sheath of the cable is firmly held by the clamp

We strongly recommend that this machine is connected to the mains supply via a Residual Current Device (RCD). If in any doubt, consult a qualified electrician. **DO NOT** attempt any repairs yourself.

OVERVIEW & INVENTORY

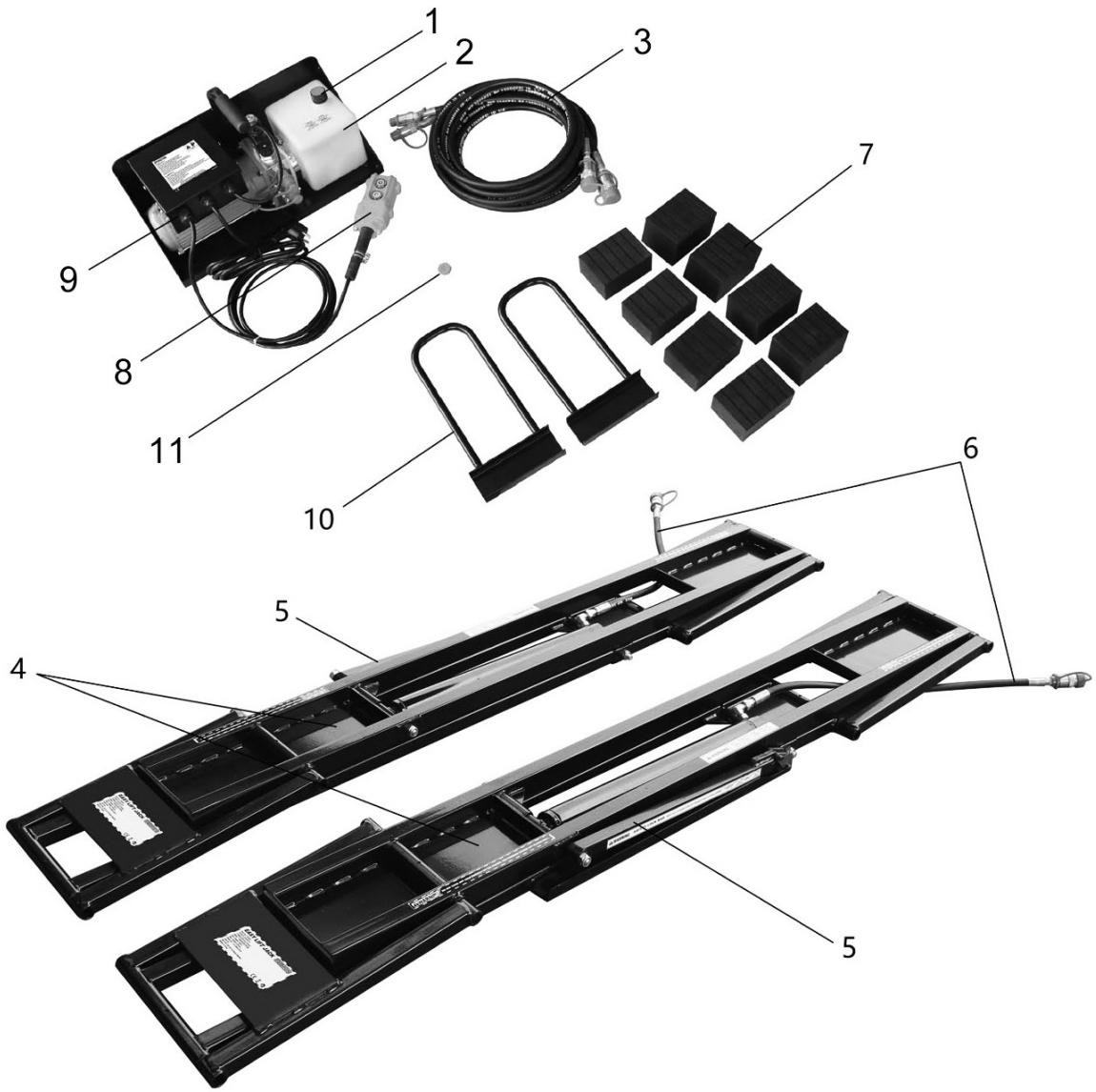

1. Filler plug for hydraulic fluid
2. Hydraulic fluid reservoir
3. Long hydraulic hoses with couplers (x2)
4. Lifting frames (x2)
5. Safety lock bar (x2)
6. Short hydraulic hoses with couplers (x2)
7. Rubber lifting blocks 55mm (X4) and 75mm (x4)
8. Remote control
9. Hydraulic power unit
10. Positioning handles
11. Sealing plug for hydraulic reservoir

UNPACKING

WARNING: DUE TO THE WEIGHT OF THE COMPONENTS IT IS ADVISED THAT TWO PEOPLE PERFORM THE UNPACKING.

Unpack the components and remove packing materials. Check to ensure that no damage has occurred during transit. Before proceeding, please check contents against the inventory list and immediately advise the CLARKE dealer where you purchased the product if any parts are missing. Refer also to the inventory on page 7.

ASSEMBLY & PREPARATION

Unpack the equipment, laying out the loose items using a clean, level area.

NOTE: On delivery, there will be no hydraulic fluid in the fluid reservoir of the power unit and none has been supplied. Fill with hydraulic fluid before using the product.

1. Unscrew the filler plug (1) and fill with 2 litres of hydraulic oil (ISO-15, ISO-46 or HP 32) in the fluid reservoir (2). Screw the plug back on.

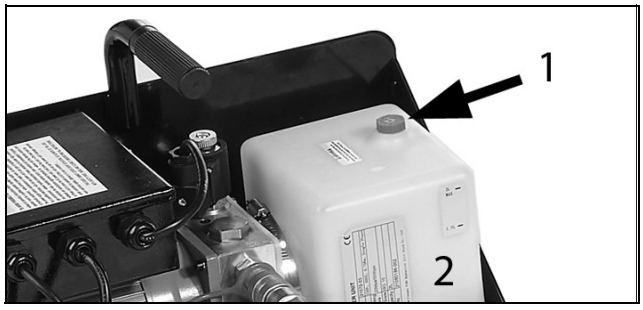

NOTE: HP 32 Hydraulic Oil can be purchased from your local CLARKE dealer.

- CLARKE 1 litre HP 32 Hydraulic Oil, Part No: 3050830
- CLARKE 5 litre HP 32 Hydraulic Oil, Part No: 3050835

NOTE: Hydraulic fluids should **NOT** be mixed under any circumstances, i.e using 2 litres of HP 32, then subsequently topping up with another fluid (e.g. ISO 15), needs to be avoided.

2. Connect the female couplers on the long hose (3) to the male couplers on the hydraulic power unit (9).

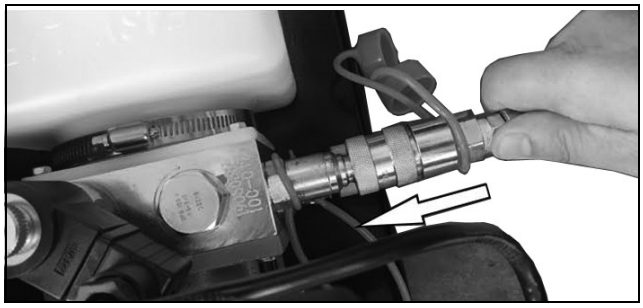

3. Route the short hose (6) under the bottom of the lifting frames (4), never over the lifting frames.



4. Connect the male couplers on the long hoses to the female couplers on the short hose.

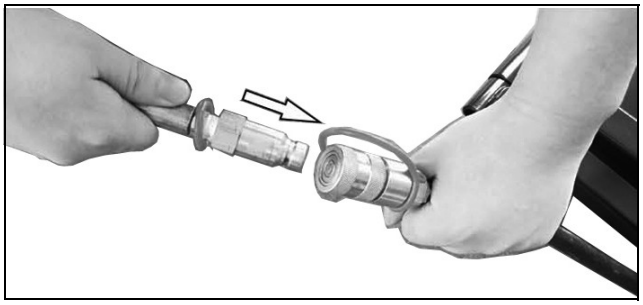

Insert the retaining ball into the corresponding socket and twist to lock the hoses together.

- The knurled finish facilitates twisting and ensures a secure connection.

NOTE: Always replace the protective cap onto the hose end when disassembled.

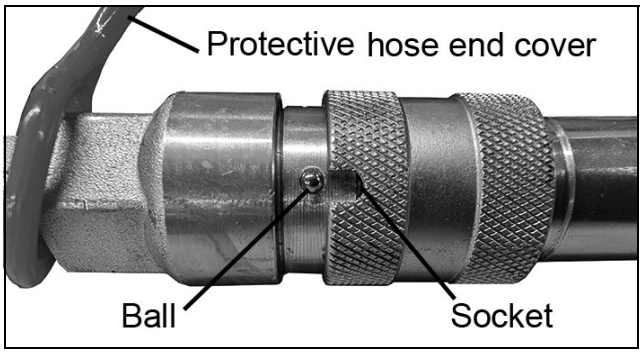

5. Connect the power unit to the power supply.
   - The lift is then ready to use.

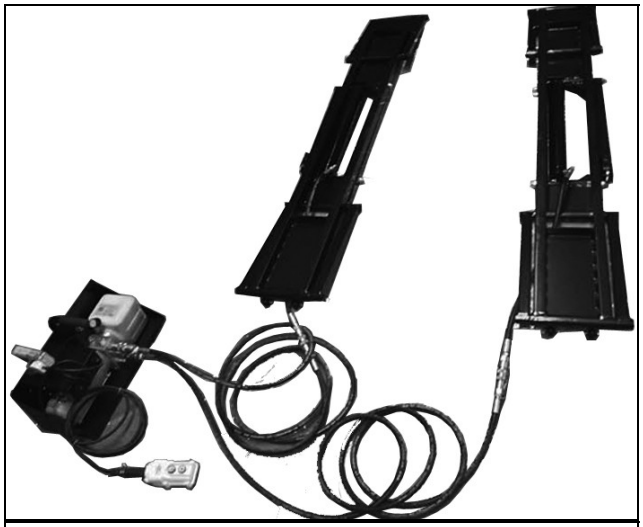

6. Press the UP button (Up) on the remote control (8) to lift and the DN button (Down) to lower.

NOTE: If the Up (A) or Down (B) buttons stop working, check to see if the Emergency Stop (C) button has been activated. Turn clockwise to reset

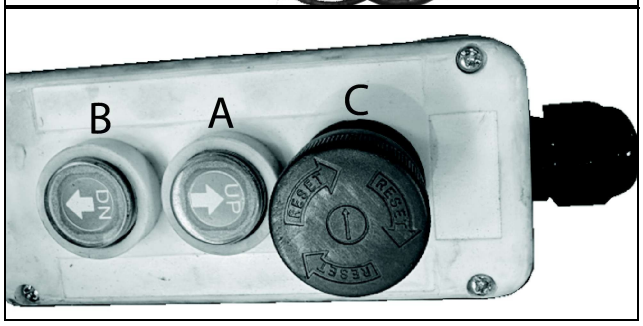

NOTE: Do not raise to maximum height without a load.

BLEEDING

Air may accumulate within the hydraulic system after connecting the hoses causing erratic movement during operation. Raising and lowering the lift few time should purge the air from the system, giving smooth movement.

OPERATION AND LIFTING PROCEDURE

POSITIONING THE LIFTING FRAMES

IMPORTANT:

- Before positioning the lifting frames, check that both frames are fully lowered and that the work area is free from obstacles.
- Check that the vehicle is well balanced and cannot tip in any direction.
- Never lift a load directly on the lifting frames – always use the lifting blocks.

The lifting frames can be positioned under the vehicle either from the outside or the inside.

Avoid driving over the hydraulic hoses.

WARNING: DO NOT DRIVE THE VEHICLE ONTO THE LIFTING FRAMES.

FROM THE OUTSIDE

1. Park the vehicle in the desired location and align the lifting frames between the wheels along the vehicle's sides. If the distance between the wheels is too short for there to be room for the lifting frames, turn the lifting frames and first push in one end and then the other.
2. Check that the safety lock bars are facing out.
3. Move the lifting frames to the desired positions under the vehicle.

FROM THE INSIDE

1. Position the lifting frames beside each other. Check that the safety lock bars are facing out.
2. Move the vehicle forward so that the lifting frames are midway under the vehicle. Avoid driving over the hydraulic hoses.
3. Move the lifting frames to the desired location under the vehicle's lifting points. The lifting handles can be used for this.

Parts & Service: 020 8988 7400 / E-mail: Parts@clarkeinternational.com or Service@clarkeinternational.com

POSITIONING THE LIFTING FRAMES UNDER THE VEHICLE

IMPORTANT:

1. Determine the desired method for placing the lifting frames under the vehicle.
2. Place lifting blocks of the same thickness on the lifting frame plates.
3. Position the lifting frames in a suitable place in relation to the lifting points on the vehicle.

4. Adjust the lifting blocks on the plates so that they are directly beneath the vehicle's lifting points.
   - In this way, the lifting frames and lifting blocks are correctly positioned to lift the vehicle.

IMPORTANT: The lifting frames must be in parallel under the vehicle.

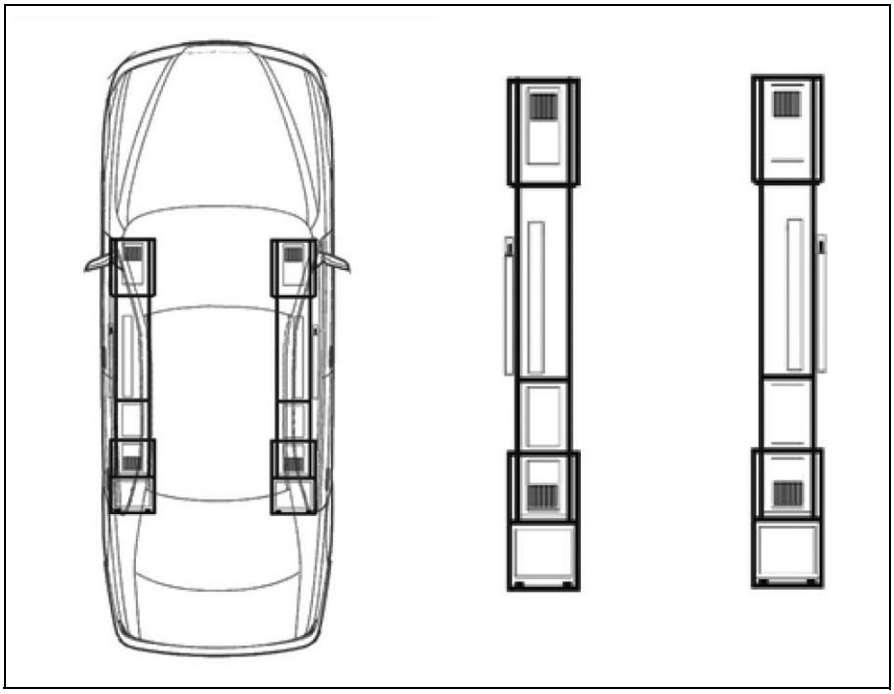

LIFTING BLOCKS

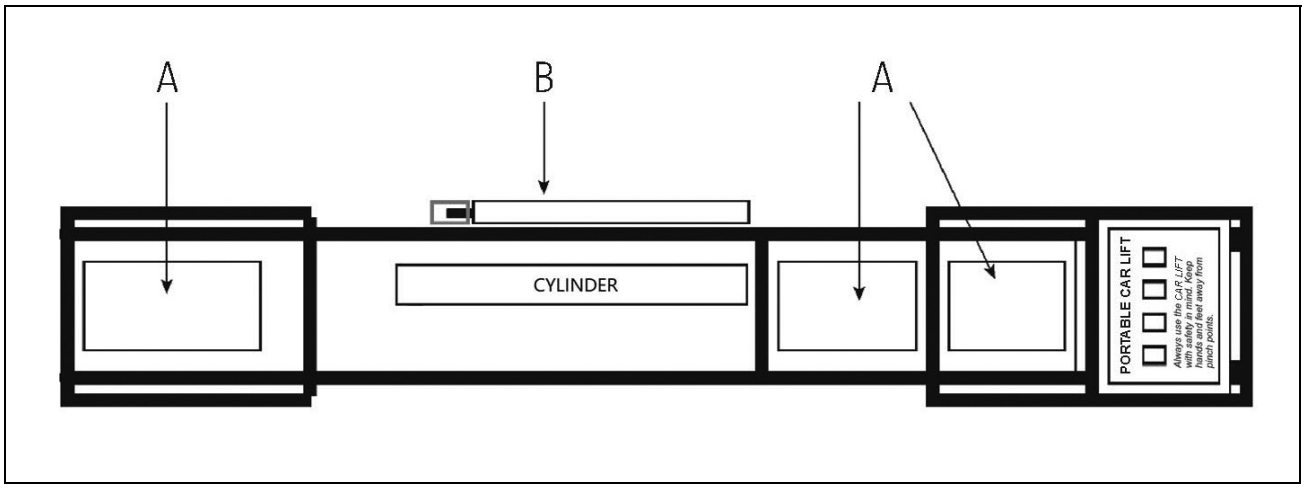

NEVER raise a load directly on the frames. Always use the rubber lift blocks provided. Position them in each of the trays on the platforms.

- The lifting blocks can be positioned at centres of 900 - 1410 mm.

A. Storage tray for the lifting blocks.
B. Safety lock bar, (must be on outside).

SAFETY LOCKING BARS

On each lifting frame there is a lock bar that is used to lock the frame in the required position.

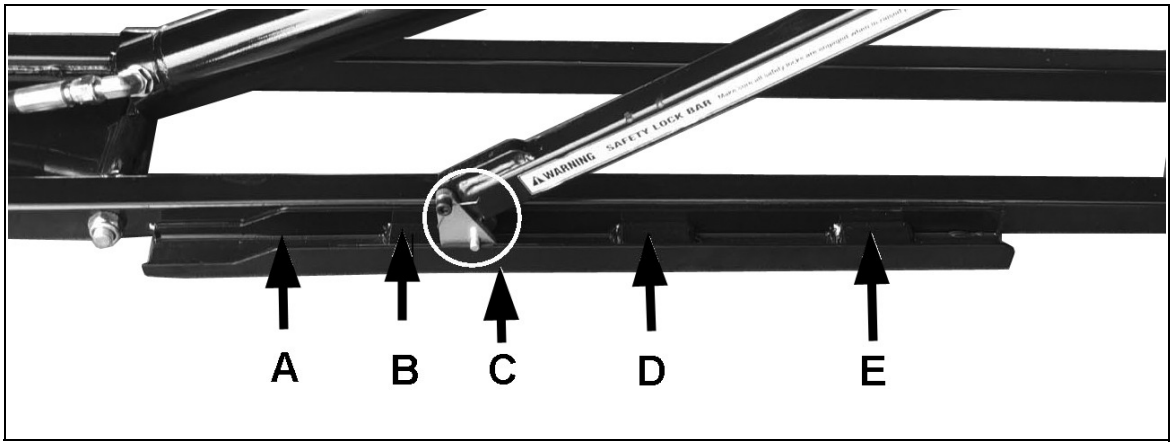

This lift has three locking positions:

- A. Tracks.
- B. Lower Locking Position.
- C. The Turning Block MUST remain in the tracks.
- D. Middle Locking Position.
- E. Upper Locking Position.

DO NOT leave the lift unattended if is not fully lowered or locked in one of the three locked positions. Always check before use that the locking bars can move easily and remain in their tracks.

The product will not work correctly if the locking bars have become stuck in the upper position or are not located in their tracks.

LIFTING

1. Before raising the lift, check to ensure the vehicle is stable, ensuring there is nothing to obstruct the lift.
2. Press and hold the U button on the remote control. The lifting frames will raise.
3. Release the U button just before the lifting block comes into contact with the vehicle's lifting points. The lifting frames will stop moving. Check that the rubber lifting blocks are correctly aligned in relation to the vehicle's lifting points. Adjust the rubber lifting blocks if necessary.
   - The vehicle may need to be lowered slightly in order for the rubber lifting blocks to be able to be moved.
4. Press the U button on the remote control again to continue lifting.

WARNING: DO NOT STOP LIFTING UNTIL THE LIFTING FRAMES HAVE PASSED THE LOWER LOCKING POSITION.

5. Release the U button to stop lifting immediately after the lower locking position, even if you are going to continue lifting to the upper locking position.
6. Check that the lifting blocks are located at the vehicle's lifting points. If the lifting blocks are correctly positioned, continue lifting. If the lifting blocks are not correctly positioned, press the D button on the remote control to lower the vehicle and make the necessary adjustments.
7. Check that the vehicle is correctly balanced. If it is, continue lifting. If the vehicle is not correctly balanced, press the D button on the remote control to lower the vehicle and make the necessary adjustments.
8. Lift the vehicle a little way past the desired locking position (lower or upper).
9. Release the U button and press the D button to lower the vehicle to the locking position. The lowering of the lifting frames is interrupted by locking.
10. Check that both lifting frames have been locked at the same locking position.

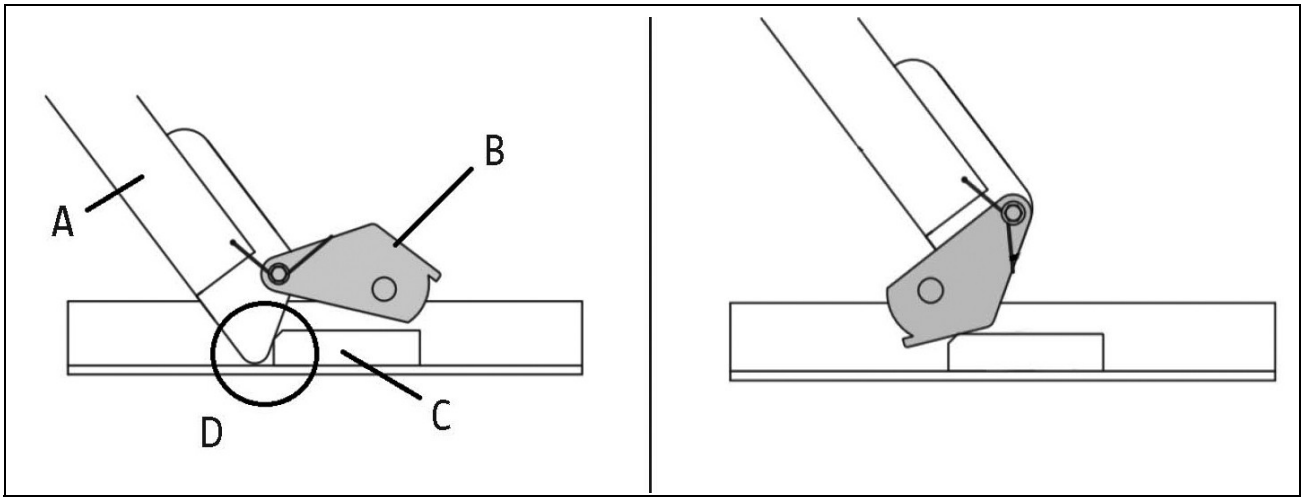

A. Locking bar

B. Turning block

C. Locking block

D. Locked position

WARNING: BEFORE STARTING WORK ON THE VEHICLE OR LEAVING THE AREA, CHECK VISUALLY THAT BOTH THE LIFTING FRAMES ARE LOCKED IN THE SAME LOCKING POSITION AND THAT ALL THE LIFTING BLOCKS ARE IN CONTACT WITH THE VEHICLE'S LIFTING POINTS. WORK ON THE VEHICLE CAN BE PERFORMED WHEN BOTH THE LIFTING FRAMES ARE LOCKED IN THE SAME LOCKING POSITION AND ALL THE LIFTING BLOCKS ARE IN CONTACT WITH THE VEHICLE'S LIFTING POINTS. NEVER WORK OR SPEND TIME UNDER A RAISED VEHICLE THAT IS NOT SUPPORTED AT THE LIFTING POINTS WITH APPROVED SUPPORTS.

LOWERING THE FRAMES FROM THE LOCKED POSITION

WARNING: WHEN LOWERING THE FRAMES, MAKE SURE THE LOCKING BAR AND THE TURNING BLOCK STAY IN THEIR TRACKS. IF THEY GET KNOCKED SIDEWAYS, FOR EXAMPLE, THEY CAN GET STUCK ON THE RAIL OF THE TRACK WHICH COULD RESULT IN THE LIFT NOT LOWERING CORRECTLY.

1. Press the UP button until the locking bar is clear of the locking block.
2. Lift the locking bar on both frames so that the turning block is on top of the locking block on both frames, You can use a tool to lift the locking bar.
3. Press the D(own) button on the remote control. Make sure the locking bar is clear of the locking block on both frames on their way down. Release the DOWN button if either side does not clear the locking block.
4. Continue pressing the D(own) button until both frames are lowered to the ground.

   NOTE: Press and hold the D(own) button for a few seconds after the lifting frames have been fully lowered in order to return as much hydraulic fluid as possible to the reservoir.

5. Remove the frames from underneath the vehicle.
   - You may want to use the frame handles.
6. Move the vehicle as required. Take care not to drive the vehicle over the frames or the hydraulic hoses.

MAINTENANCE

WARNING: ISOLATE THE POWER SUPPLY AND RELIEVE THE HYDRAULIC PRESSURE PRIOR TO ANY MAINTENANCE AND/OR CLEANING. Relieve pressure by holding the D button for a few seconds after the lifting frames have been fully lowered, in order to return as much hydraulic fluid to the fluid reservoir.

CHECKS BEFORE USE

- Check all bolted joints regularly and tighten them if necessary.
- Check the frames for cracks in weld joints as well as damaged, loose, worn or missing parts before use. **DO NOT** use the lift until any worn or damaged parts have been replaced.
- Check that the safety lock bars are in good condition and working properly. **DO NOT** use if the safety lock bars are damaged.
- Check the lifting blocks and replace them if they are damaged.

MONTHLY (IF IN CONSTANT USE)

Carry out the following maintenance every month.

1. Lubricate all joints and check for wear. If necessary, lubricate with white lithium grease or equivalent using a grease gun at the locations shown.

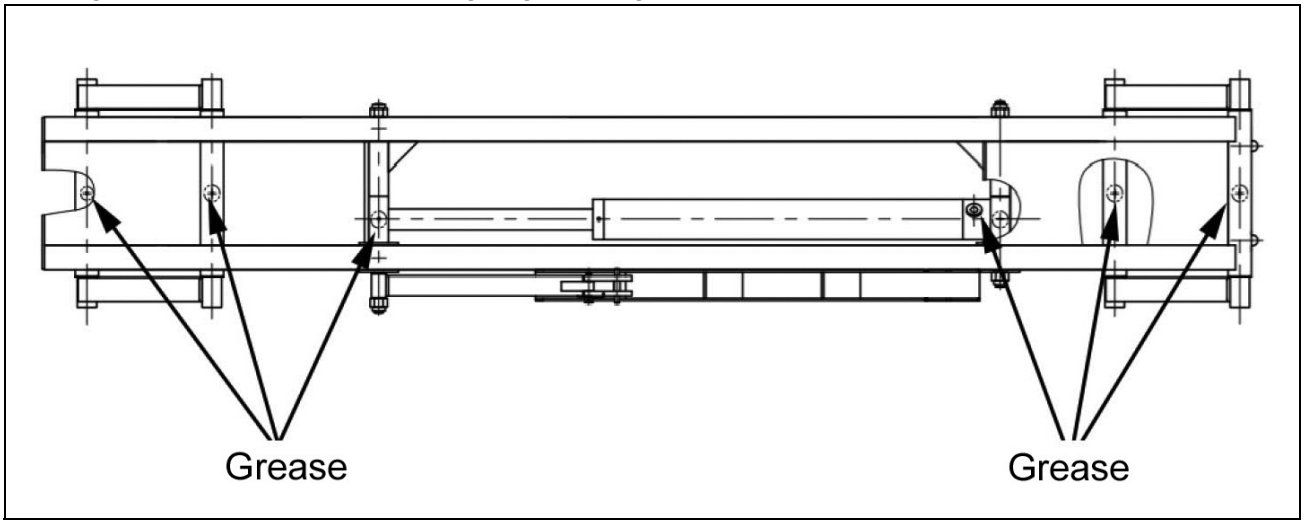

2. Check the hydraulic fluid level and top up if necessary.
3. Check that the safety and warning labels on the product are intact and legible. Replace any that are illegible or missing.

CLEANING

Keep all parts clean for optimum functionality and service life.

- Use suitable personal protective equipment when working with the hydraulic system.

- Avoid skin contact with hydraulic fluid. Follow the manufacturer's safety instructions.

Contact a doctor immediately in the event of swallowing of hydraulic fluid.

MOVING AND STORAGE

If you need to transport the hydraulic power unit any distance, replace the filler plug on the fluid reservoir with the sealing plug.

- The filler plug cannot seal the fluid into the reservoir effectively allowing possible spillage during transportation.

If you need to transport the power unit a long distance, empty the fluid before dispatch. **DO NOT** use sealing plug when you are using the power unit as it will cause an airlock.

If the lift is to be moved, release the long hydraulic hoses from the power unit and move the pump, Move the lifting frames with hoses separately.

Store the lift fully lowered when not in use.

REPAIRS

Contact your CLARKE dealer for technical assistance or repairs. The warranty will be invalidated if the product is damaged as a result of an accident, negligence or incorrect use, or if it has been repaired by unauthorised personnel.

WARNING: ANY REPAIRS MUST BE CARRIED OUT BY AN AUTHORISED SERVICE CENTRE OR OTHER QUALIFIED PERSONNEL.

ENVIRONMENTAL PROTECTION

One of the most damaging sources of environmental pollution is oil products. **NEVER** throw away used hydraulic oil with domestic refuse or flush it down a sink or drain. Collect any hydraulic oil in a leak proof container and take it to your local waste disposal site.

If disposing of this product or any damaged components, do not dispose of with general waste. This product contains valuable raw materials and should be taken to your local civic amenity site for recycling of metal products.

TROUBLESHOOTING

The troubleshooting guide may identify common problems and suggestions as to how they can be rectified. Contact your dealer if you experience a problem that is not included in this guide.

Problem	Suggested action
Lifting frames cannot be raised or lowered	Check that the emergency stop button has not been activated. Turn clockwise to reset
	Check the hydraulic hoses are not bent, clenched or leaking
	Check the level of the hydraulic fluid in the reservoir.
	Check that the power unit has the correct power supply
	Bleed the hydraulic cylinders
Lifting frames cannot be lowered	Confirm that there is a load on the frames. If not, place a load on them. (the product is designed to operate with a load in position.
The power unit fails to deliver any pressure	Send the power unit for repair or contact your CLARKE dealer.
Lifting frames cannot be raised from a fully lowered position	There must be space between the ground and the load that is to be lifted in order to raise the lifting frames slightly before lifting the load. The lift cannot lift a full load from a fully lowered position.
Contaminated hydraulic fluid.	Replace with new fluid of the correct type listed on page 2.
Abnormal noise during use.	Lubricate the joints with lithium grease
Lifting frames sink slowly without any buttons being pressed.	Check the safety locking bars are locked in one of the locking positions. Otherwise, hydraulic fluid could be leaking under pressure. Do not leave unattended if not fully lowered or locked in one of the three positions.
Couplings are difficult to connect	Residual pressure in hydraulic systems. Relieve any pressure by holding the D button for a few seconds after the lifting frames have been fully lowered, in order to return as much hydraulic fluid to the fluid reservoir. If the pressure is too high contact your CLARKE dealer.

COMPONENT PARTS

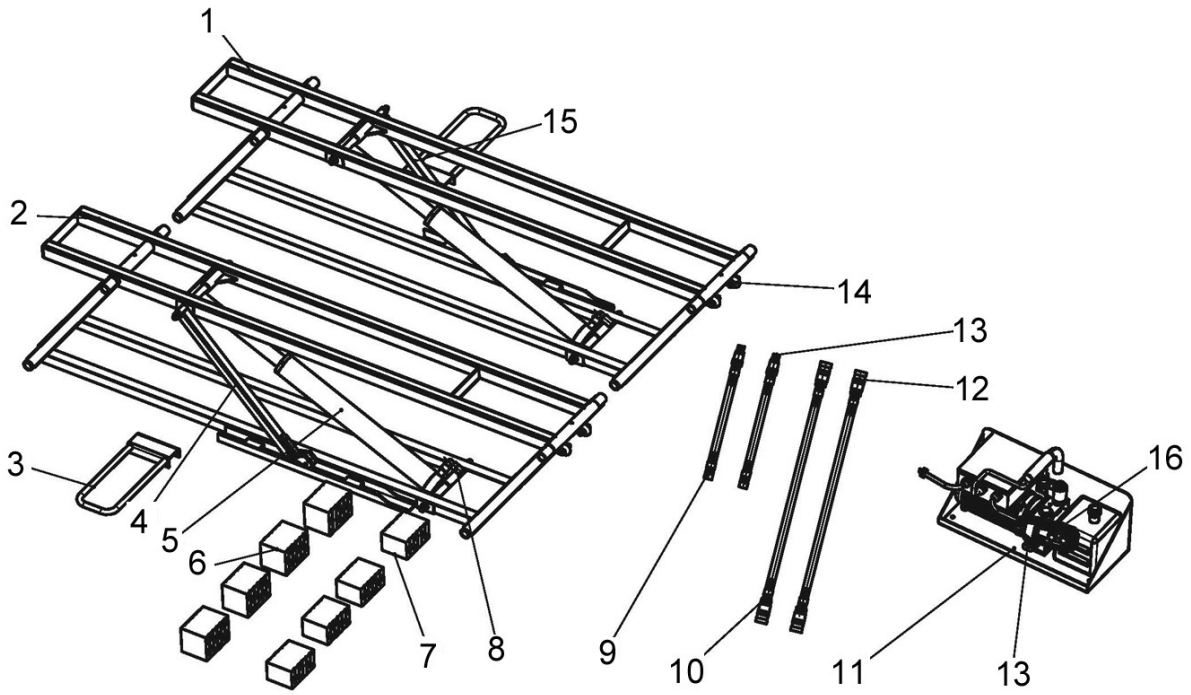

ITEM	DESCRIPTION
1	Lift frame A
2	Lift frame B
3	Frame handle
4	Locking bar A
5	Hydraulic cylinder
6	Rubber lift blocks (3”)
7	Rubber lift blocks (2”)
8	Fitting

ITEM	DESCRIPTION
9	Short hose
10	Long hose
11	Power unit
12	Female coupler
13	Male coupler
14	Wheel
15	Locking bar B
16	Controller assembly

UK CA

Clarke® INTERNATIONAL

Hemnall Street, Epping, Essex, CM16 4LG

DECLARATION OF CONFORMITY

This is an important document and should be retained.

We hereby declare that this product(s) complies with the following legislation:

Electromagnetic Compatibility Regulations 2016

Supply of Machinery (Safety) Regulations 2008

The Restriction of the Use of Certain Hazardous Substances in Electrical and Electronic Equipment Regulations 2012

The following standards have been applied to the product(s):

EN 61000-6-3:2007, EN 61000-3-2:2014, EN 61000-3-3:2013, EN 61000-6-1:2007,
EN 61000-4-2:2009, EN 61000-4-3:2006+A1:2010, EN 61000-4-4:2004, EN 61000-4-5:2006,
EN 61000-4-6:2009, EN 61000-4-8:1993+A1:2001, EN 61000-4-11:2004, EN 60204-1:2006+A1:2009,
EN ISO 12100:2010, EN 1493:2010, IEC 62321-2:2013, IEC 62321-2:2017, IEC 62321-3-1:2013,
IEC 62321-4:2013, IEC 62321-5:2013, IEC 62321-6:2015, IEC 62321-7-1:2015, IEC 62321-8:2017

The technical documentation required to demonstrate that the product(s) meet(s) the requirement(s) of the aforementioned legislation has been compiled and is available for inspection by the relevant enforcement authorities.

The UKCA mark was first applied in: 2023

Product Description: 2.25 Tonne (2250kg) Car Lift

Model Number(s): CCL2250

Serial/Batch Number: Refer to product/packaging label

Date of Issue: 26/01/2023

Signed:

J.A Clarke

Director

CE

Clarke® INTERNATIONAL

Fitzwilliam Hall, Fitzwilliam Place, Dublin 2

DECLARATION OF CONFORMITY

This is an important document and should be retained.

We hereby declare that this product(s) complies with the following legislation:

2014/30/EU	*Electromagnetic Compatibility Directive*
2006/42/EC	*Machinery Directive*
2011/65/EU	*Restriction of the Use of Certain Hazardous Substances in Electrical and Electronic Equipment Directive*

The following standards have been applied to the product(s):

EN 61000-6-3:2007, EN 61000-3-2:2014, EN 61000-3-3:2013, EN 61000-6-1:2007,
EN 61000-4-2:2009, EN 61000-4-3:2006+A1:2010, EN 61000-4-4:2004, EN 61000-4-5:2006,
EN 61000-4-6:2009, EN 61000-4-8:1993+A1:2001, EN 61000-4-11:2004, EN 60204-1:2006+A1:2009,
EN ISO 12100:2010, EN 1493:2010, IEC 62321-2:2013, IEC 62321-2:2017, IEC 62321-3-1:2013,
IEC 62321-4:2013, IEC 62321-5:2013, IEC 62321-6:2015, IEC 62321-7-1:2015, IEC 62321-8:2017

The technical documentation required to demonstrate that the product(s) meet(s) the requirement(s) of the aforementioned legislation has been compiled and is available for inspection by the relevant enforcement authorities.

The CE mark was first applied in: 2023

Product Description: 2.25 Tonne (2250kg) Car Lift

Model Number(s): CCL2250

Serial/Batch Number: Refer to product/packaging label

Date of Issue: 26/01/2023

Signed:

J.A Clarke

Director

Parts & Service: 020 8988 7400 / E-mail: Parts@clarkeinternational.com or Service@clarkeinternational.com

A SELECTION FROM THE VAST RANGE OF

Clarke®

QUALITY PRODUCTS













AIR COMPRESSORS
From DIY to industrial, Plus air tools, spray guns and accessories.

GENERATORS
Prime duty or emergency standby for business, home and leisure.

POWER WASHERS
Hot and cold, electric and engine driven - we have what you need

WELDERS
Mig, Arc, Tig and Spot.
From DIY to auto/industrial.

METALWORKING
Drills, grinders and saws for DIY and professional use.

WOODWORKING
Saws, sanders, lathes, mortisers and dust extraction.

HYDRAULICS
Cranes, body repair kits, transmission jacks for all types of workshop use.

WATER PUMPS
Submersible, electric and engine driven for DIY, agriculture and industry.

POWER TOOLS
Angle grinders, cordless drill sets, saws and sanders.

STARTERS/CHARGERS
All sizes for car and commercial use.

PARTS & SERVICE:
0208 988 7400

Parts Enquiries
Parts@clarkeinternational.com

Servicing & Technical Enquiries
Service@clarkeinternational.com

SALES: UK 01992 565333 or Export 00 44 (0)1992 565335

Clarke® INTERNATIONAL Hemnall Street, Epping, Essex CM16 4LG
www.clarkeinternational.com